SGS-THOMSON MICROELECTRONICS

STP50NE08

N - CHANNEL ENHANCEMENT MODE " SINGLE FEATURE SIZE™ " POWER MOSFET

TYPE	V_{DSS}	$R_{DS(on)}$	I_D
STP50NE08	80 V	<0.024 Ω	50 A

- TYPICAL $R_{DS(on)}$ = 0.020 Ω
- EXCEPTIONAL dv/dt CAPABILITY
- 100% AVALANCHE TESTED
- LOW GATE CHARGE AT 100 °C
- APPLICATION ORIENTED CHARACTERIZATION

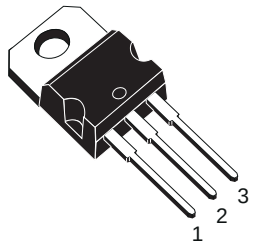

TO-220

DESCRIPTION

This Power MOSFET is the latest development of SGS-THOMSON unique "Single Feature Size™ " strip-based process. The resulting transistor shows extremely high packing density for low on-resistance, rugged avalanche characteristics and less critical alignment steps therefore a remarkable manufacturing reproducibility.

INTERNAL SCHEMATIC DIAGRAM

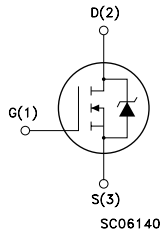

APPLICATIONS

- HIGH CURRENT, HIGH SPEED SWITCHING
- SOLENOID AND RELAY DRIVERS
- MOTOR CONTROL, AUDIO AMPLIFIERS
- DC-DC & DC-AC CONVERTERS
- AUTOMOTIVE ENVIRONMENT (INJECTION, ABS, AIR-BAG, LAMPDRIVERS, Etc.)

ABSOLUTE MAXIMUM RATINGS

Symbol	Parameter	Value	Unit
V_{DS}	Drain-source Voltage (V_{GS} = 0)	80	V
V_{DGR}	Drain- gate Voltage (R_{GS} = 20 kΩ)	80	V
V_{GS}	Gate-source Voltage	± 20	V
I_D	Drain Current (continuous) at T_c = 25 °C	50	A
I_D	Drain Current (continuous) at T_c = 100 °C	35	A
I_{DM}(•)	Drain Current (pulsed)	200	A
P_{tot}	Total Dissipation at T_c = 25 °C	150	W
	Derating Factor	1	W/°C
dv/dt (1)	Peak Diode Recovery voltage slope	6	V/ns
T_{stg}	Storage Temperature	-65 to 175	°C
T_j	Max. Operating Junction Temperature	175	°C

(•) Pulse width limited by safe operating area

(1) $I_{SD} \leq 50$ A, di/dt ≤ 300 A/µs, $V_{DD} \leq V_{(BR)DSS}$, $T_j \leq T_{JMAX}$

Obsolete Product(s) - Obsolete Product(s)

THERMAL DATA

$R_{thj-case}$	Thermal Resistance Junction-case Max	1	$^oC/W$
$R_{thj-amb}$	Thermal Resistance Junction-ambient Max	62.5	oC/W
$R_{thc-sink}$	Thermal Resistance Case-sink Typ	0.5	$^oC/W$
T_l	Maximum Lead Temperature For Soldering Purpose	300	^oC

AVALANCHE CHARACTERISTICS

Symbol	Parameter	Max Value	Unit
I_{AR}	Avalanche Current, Repetitive or Not-Repetitive (pulse width limited by T_j max, $\delta < 1\%$)	50	A
E_{AS}	Single Pulse Avalanche Energy (starting $T_j = 25\ ^oC$, $I_D = I_{AR}$, $V_{DD} = 50$ V)	300	mJ

ELECTRICAL CHARACTERISTICS ($T_{case} = 25\ ^oC$ unless otherwise specified)

OFF

Symbol	Parameter	Test Conditions	Min.	Typ.	Max.	Unit
$V_{(BR)DSS}$	Drain-source Breakdown Voltage	$I_D = 250\ \mu A$ $V_{GS} = 0$	80			V
I_{DSS}	Zero Gate Voltage Drain Current ($V_{GS} = 0$)	V_{DS} = Max Rating V_{DS} = Max Rating $T_c = 125\ ^oC$			1 10	µA µA
I_{GSS}	Gate-body Leakage Current ($V_{DS} = 0$)	$V_{GS} = \pm 20$ V			± 100	nA

ON (*)

Symbol	Parameter	Test Conditions	Min.	Typ.	Max.	Unit
$V_{GS(th)}$	Gate Threshold Voltage	$V_{DS} = V_{GS}$ $I_D = 250\ \mu A$	2	3	4	V
$R_{DS(on)}$	Static Drain-source On Resistance	$V_{GS} = 10V$ $I_D = 25$ A		0.020	0.024	mΩ
$I_{D(on)}$	On State Drain Current	$V_{DS} > I_{D(on)} \times R_{DS(on)max}$ $V_{GS} = 10$ V	50			A

DYNAMIC

Symbol	Parameter	Test Conditions	Min.	Typ.	Max.	Unit
g_{fs} (*)	Forward Transconductance	$V_{DS} > I_{D(on)} \times R_{DS(on)max}$ $I_D = 25$ A	20	35		S
C_{iss} C_{oss} C_{rss}	Input Capacitance Output Capacitance Reverse Transfer Capacitance	$V_{DS} = 25$ V f = 1 MHz $V_{GS} = 0$		3850 480 105	5100 650 140	pF pF pF

Obsolete Product(s) - Obsolete Product(s)

ELECTRICAL CHARACTERISTICS (continued)

SWITCHING ON

Symbol	Parameter	Test Conditions	Min.	Typ.	Max.	Unit
$t_{d(on)}$ t_r	Turn-on Time Rise Time	V_{DD} = 40 V I_D = 25 A R_G =4.7 Ω V_{GS} = 10 V (see test circuit, figure 3)		37 95	50 130	ns ns
Q_g Q_{gs} Q_{gd}	Total Gate Charge Gate-Source Charge Gate-Drain Charge	V_{DD} = 64 V I_D = 50 A V_{GS} = 10 V		85 19 28	110	nC nC nC

SWITCHING OFF

Symbol	Parameter	Test Conditions	Min.	Typ.	Max.	Unit
$t_{r(Voff)}$ t_f t_c	Off-voltage Rise Time Fall Time Cross-over Time	V_{DD} = 64 V I_D = 50 A R_G =4.7 Ω V_{GS} = 10 V (see test circuit, figure 5)		12 30 50	17 40 68	ns ns ns

SOURCE DRAIN DIODE

Symbol	Parameter	Test Conditions	Min.	Typ.	Max.	Unit
I_{SD} I_{SDM}(•)	Source-drain Current Source-drain Current (pulsed)				50 200	A A
V_{SD} (*)	Forward On Voltage	I_{SD} = 50 A V_{GS} = 0			1.5	V
t_{rr} Q_{rr} I_{RRM}	Reverse Recovery Time Reverse Recovery Charge Reverse Recovery Current	I_{SD} = 50 A di/dt = 100 A/µs V_{DD} = 30 V T_j = 150 °C (see test circuit, figure 5)		100 400 8		ns nC A

(*) Pulsed: Pulse duration = 300 µs, duty cycle 1.5 %
(•) Pulse width limited by safe operating area

Obsolete Product(s) - Obsolete Product(s)

Safe Operating Area

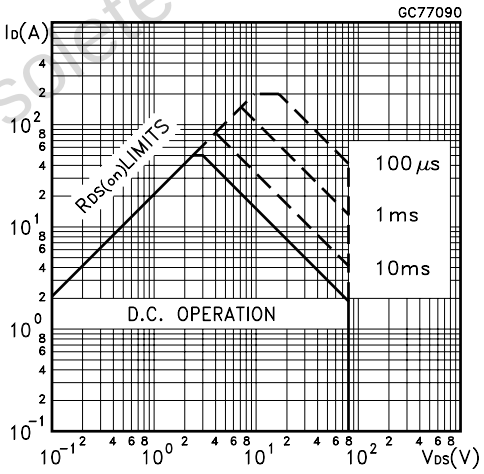

Thermal Impedance

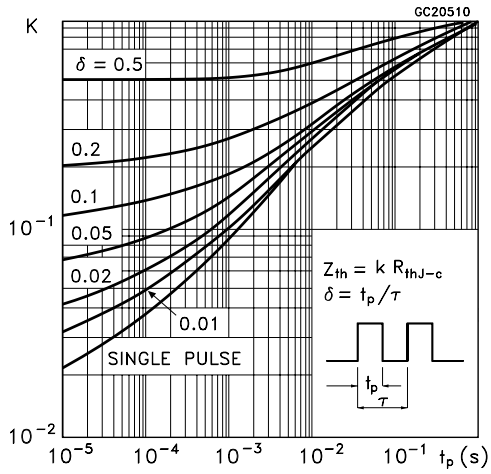

Output Characteristics

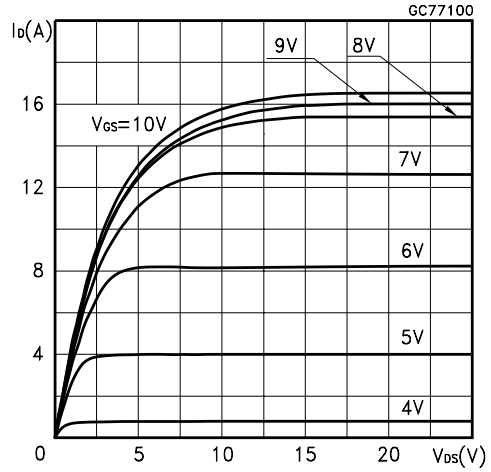

Transfer Characteristics

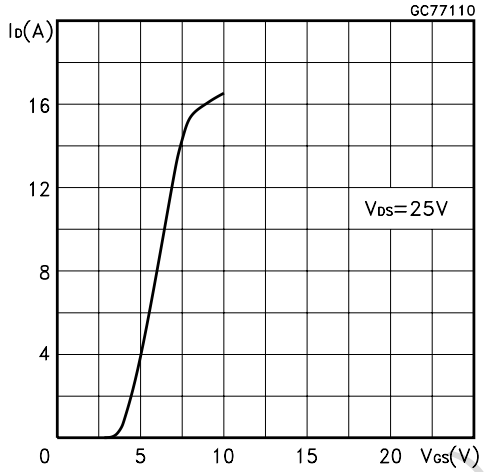

Transconductance

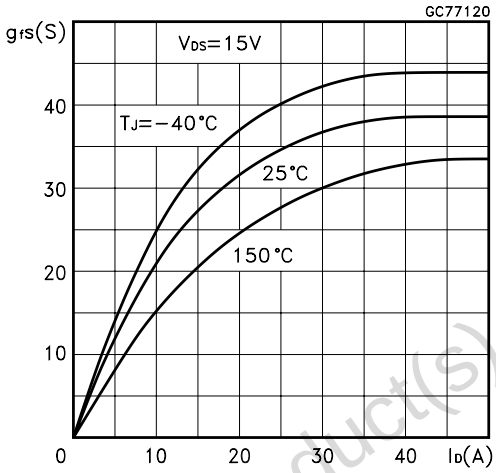

Static Drain-source On Resistance

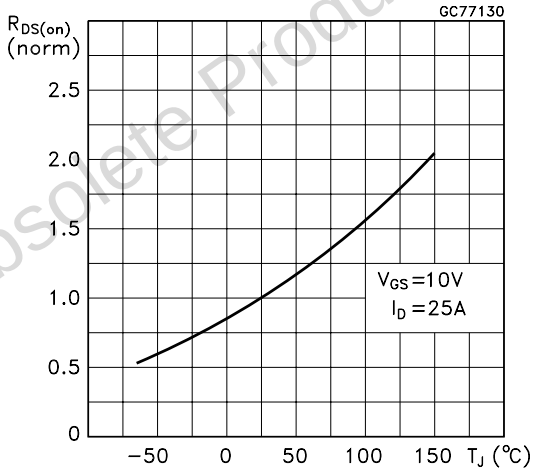

Gate Charge vs Gate-source Voltage

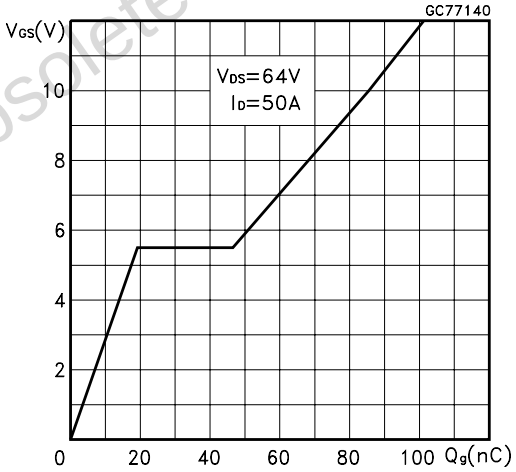

Capacitance Variations

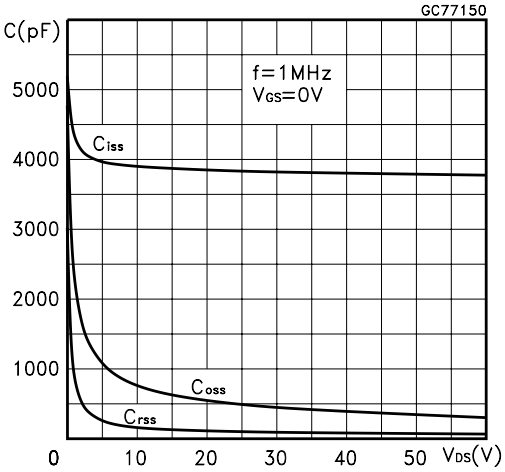

Obsolete Product(s) - Obsolete Product(s)

Normalized Gate Threshold Voltage vs Temperature

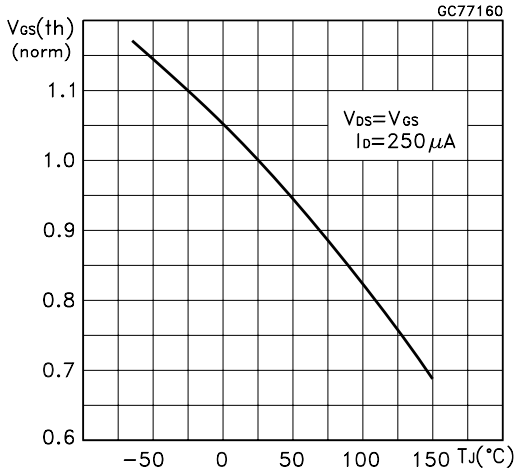

Normalized On Resistance vs Temperature

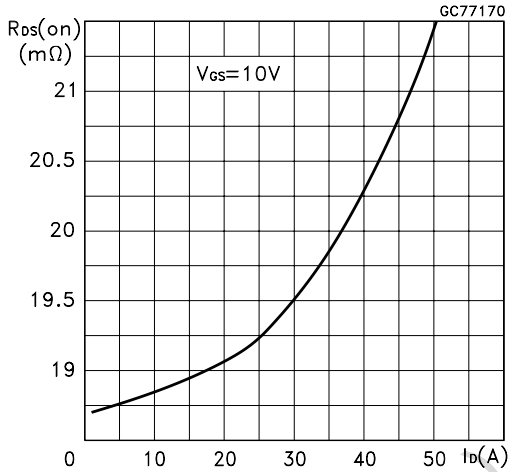

Source-drain Diode Forward Characteristics

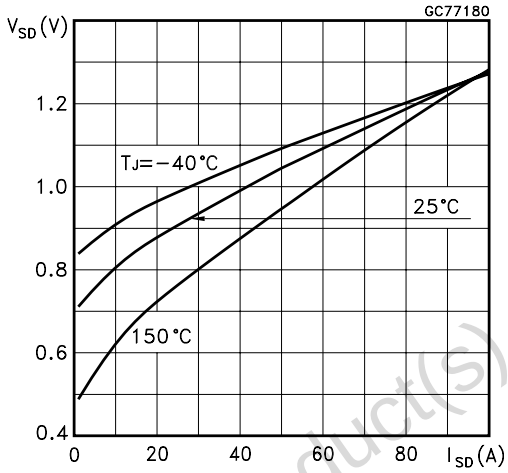

Obsolete Product(s) - Obsolete Product(s)

Fig. 1: Unclamped Inductive Load Test Circuit

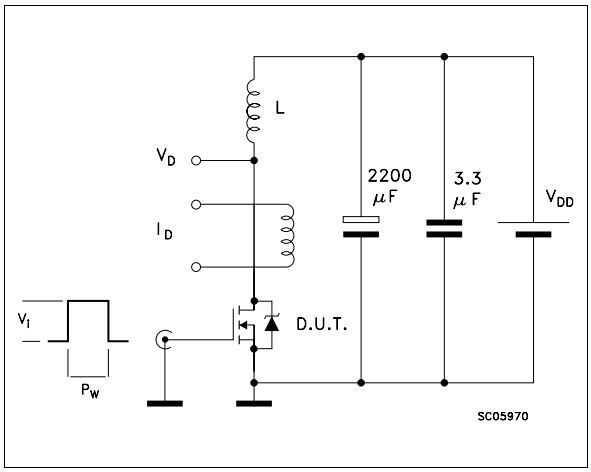

Fig. 2: Unclamped Inductive Waveform

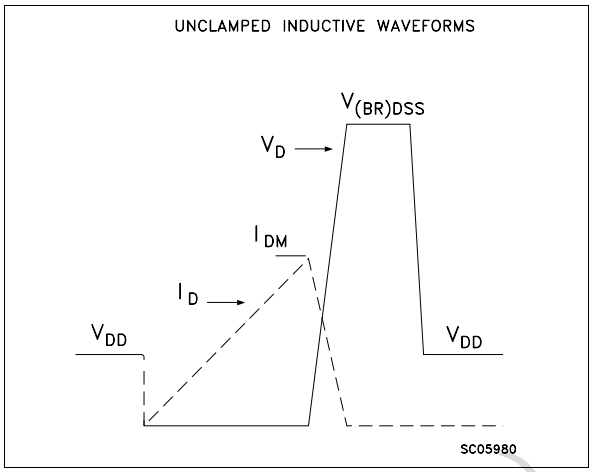

Fig. 3: Switching Times Test Circuits For Resistive Load

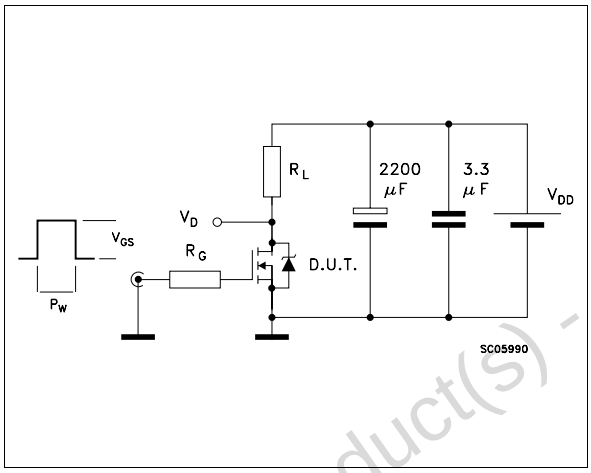

Fig. 4: Gate Charge test Circuit

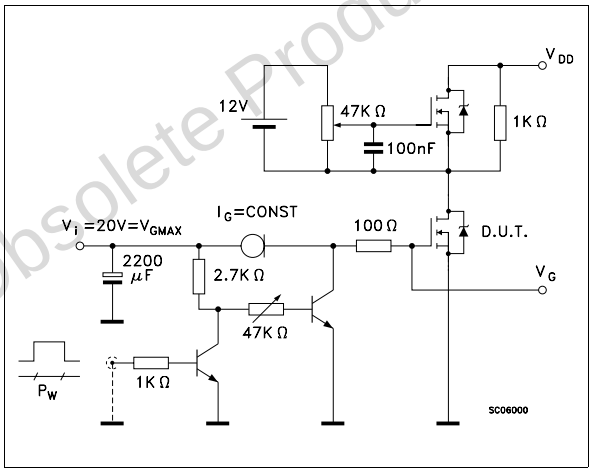

Fig. 5: Test Circuit For Inductive Load Switching And Diode Recovery Times

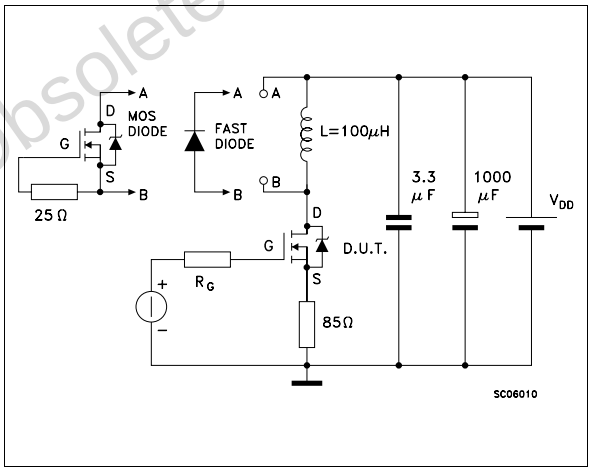

Obsolete Product(s) - Obsolete Product(s)

TO-220 MECHANICAL DATA

DIM.	mm			inch		
	MIN.	TYP.	MAX.	MIN.	TYP.	MAX.
A	4.40		4.60	0.173		0.181
C	1.23		1.32	0.048		0.051
D	2.40		2.72	0.094		0.107
D1		1.27			0.050	
E	0.49		0.70	0.019		0.027
F	0.61		0.88	0.024		0.034
F1	1.14		1.70	0.044		0.067
F2	1.14		1.70	0.044		0.067
G	4.95		5.15	0.194		0.203
G1	2.4		2.7	0.094		0.106
H2	10.0		10.40	0.393		0.409
L2		16.4			0.645	
L4	13.0		14.0	0.511		0.551
L5	2.65		2.95	0.104		0.116
L6	15.25		15.75	0.600		0.620
L7	6.2		6.6	0.244		0.260
L9	3.5		3.93	0.137		0.154
DIA.	3.75		3.85	0.147		0.151

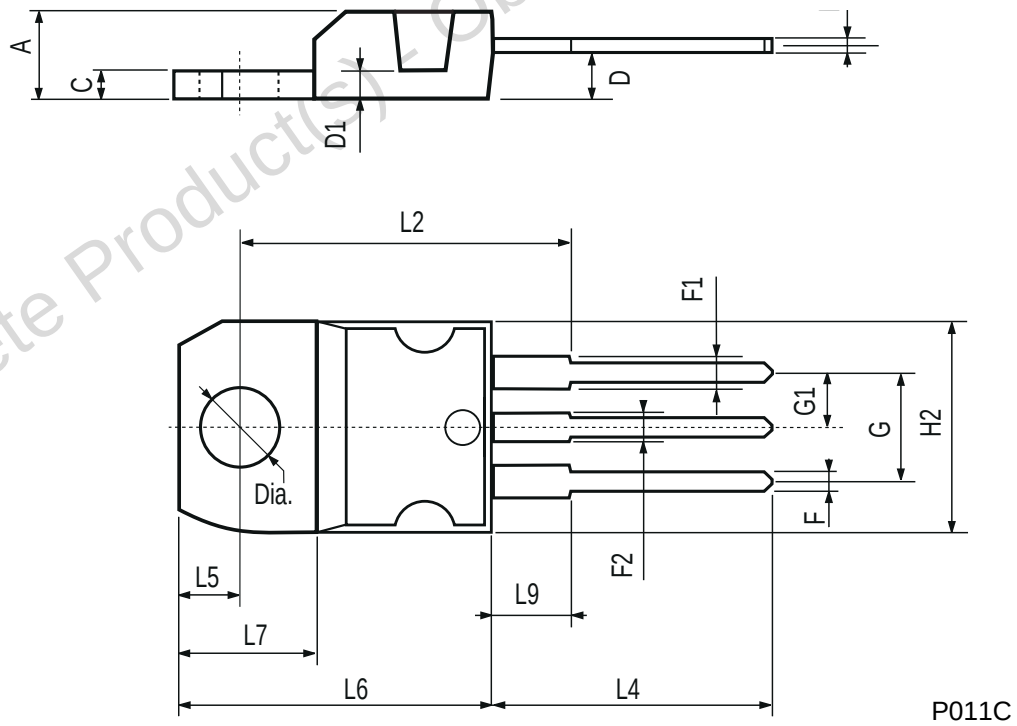

Obsolete Product(s) - Obsolete Product(s)

Obsolete Product(s) - Obsolete Product(s)

Information furnished is believed to be accurate and reliable. However, SGS-THOMSON Microelectronics assumes no responsability for the consequences of use of such information nor for any infringement of patents or other rights of third parties which may results from its use. No license is granted by implication or otherwise under any patent or patent rights of SGS-THOMSON Microelectronics. Specifications mentioned in this publication are subject to change without notice. This publication supersedes and replaces all information previously supplied.
SGS-THOMSON Microelectronics products are not authorized for use as critical components in life support devices or systems without express written approval of SGS-THOMSON Microelectonics.

© 1998 SGS-THOMSON Microelectronics - Printed in Italy - All Rights Reserved

SGS-THOMSON Microelectronics GROUP OF COMPANIES
Australia - Brazil - Canada - China - France - Germany - Italy - Japan - Korea - Malaysia - Malta - Morocco - The Netherlands - Singapore - Spain - Sweden - Switzerland - Taiwan - Thailand - United Kingdom - U.S.A
. . .